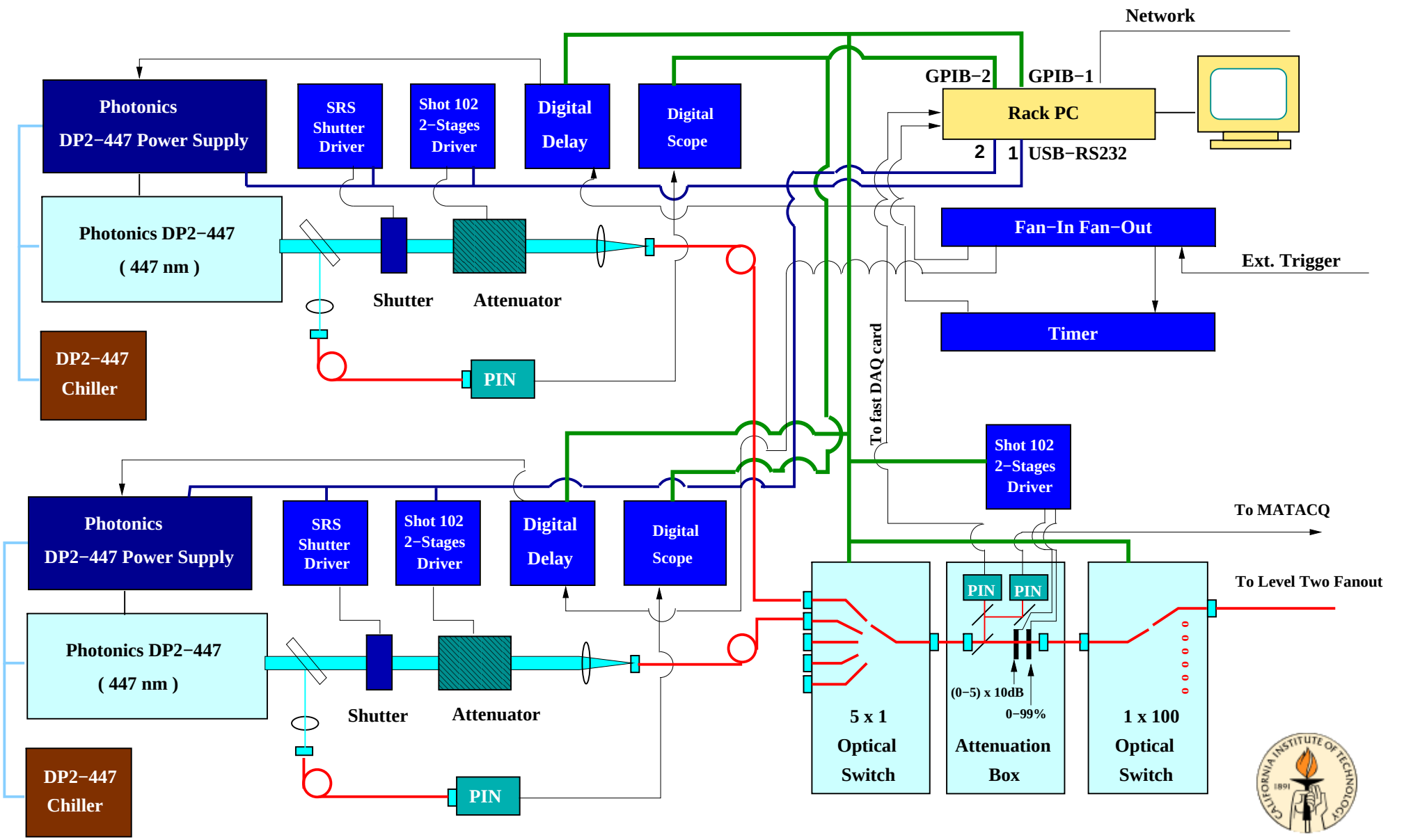

Caltech *Jan. 28, 2013*