ECAL light monitoring system

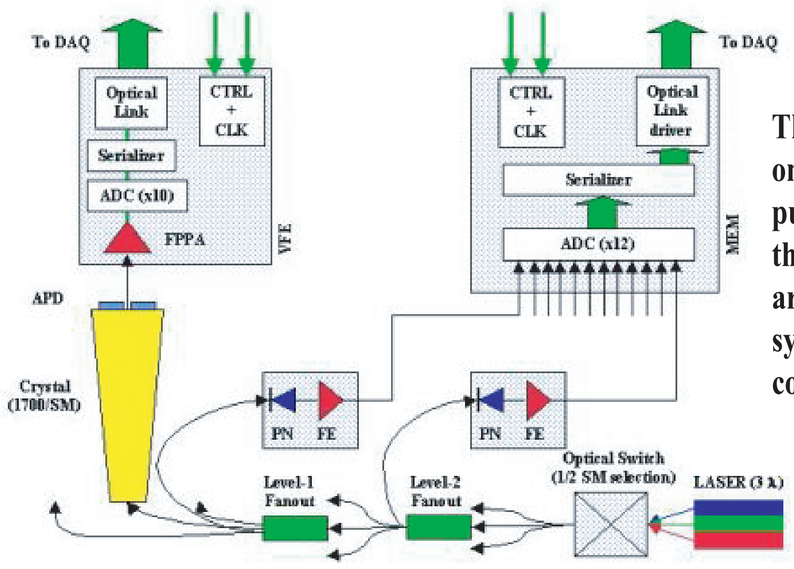

The light monitoring system, shown on the left, is designed to inject light pulses into each crystal to measure the optical transmission. The pulses are distributed via an optical-fibre system. The system is designed to continuously monitor the calorimeter.

The ECAL monitoring light source consists of 3 laser systems with diagnostics, 2 optical switches, a monitor and a PC based controller. The main laser parts are:

- Nd:YLF pump laser,
- power supply and cooler unit,
- Ti:Sapphire laser and its controller,
- Neslab cooler for LBO crystals in Ti:S laser.

All 3 lasers are model 527DQ-S Q-switched green Nd;YLF laser, which is a commercial product by Quantronix. It provides frequency doubled laser pulse at 527 nm with pulse intensity up to 20 mJ at repetition rate up to 1 kHz. The wavelength of the Ti:S laser is tunable by choosing appropriate built-in filter.2 wavelengths are available for each Ti:S laser.The 4 wavelengths: 440, 495, 709 and 796 nm are available by using a 2x1optical switch. The choosen wavelength is then sent through each ECAL supermodule since to a 1x80 optical switch. The third laser is a spare laser to guarantee 100% availability of the main monitoring wavelength at 440nm even during maintenance.

The laser system operation is controlled by a PC,which sets which sets laser run parameters and collects laser performance data measured by diagnostics. During test beam, the laser control PC will function in a slave mode. The communication of the PC with the H4 DAQ is carried out through Ethernet (wavelength, attenuation (neutral wheel filter) and the output channel number of the 1x80 optical switch) . At the beginning of each run, the H4 DAQ sets and checks laser parameters by sending a command file and the laser responds by sending an acknowledge file. number of the 1x80 optical switch.

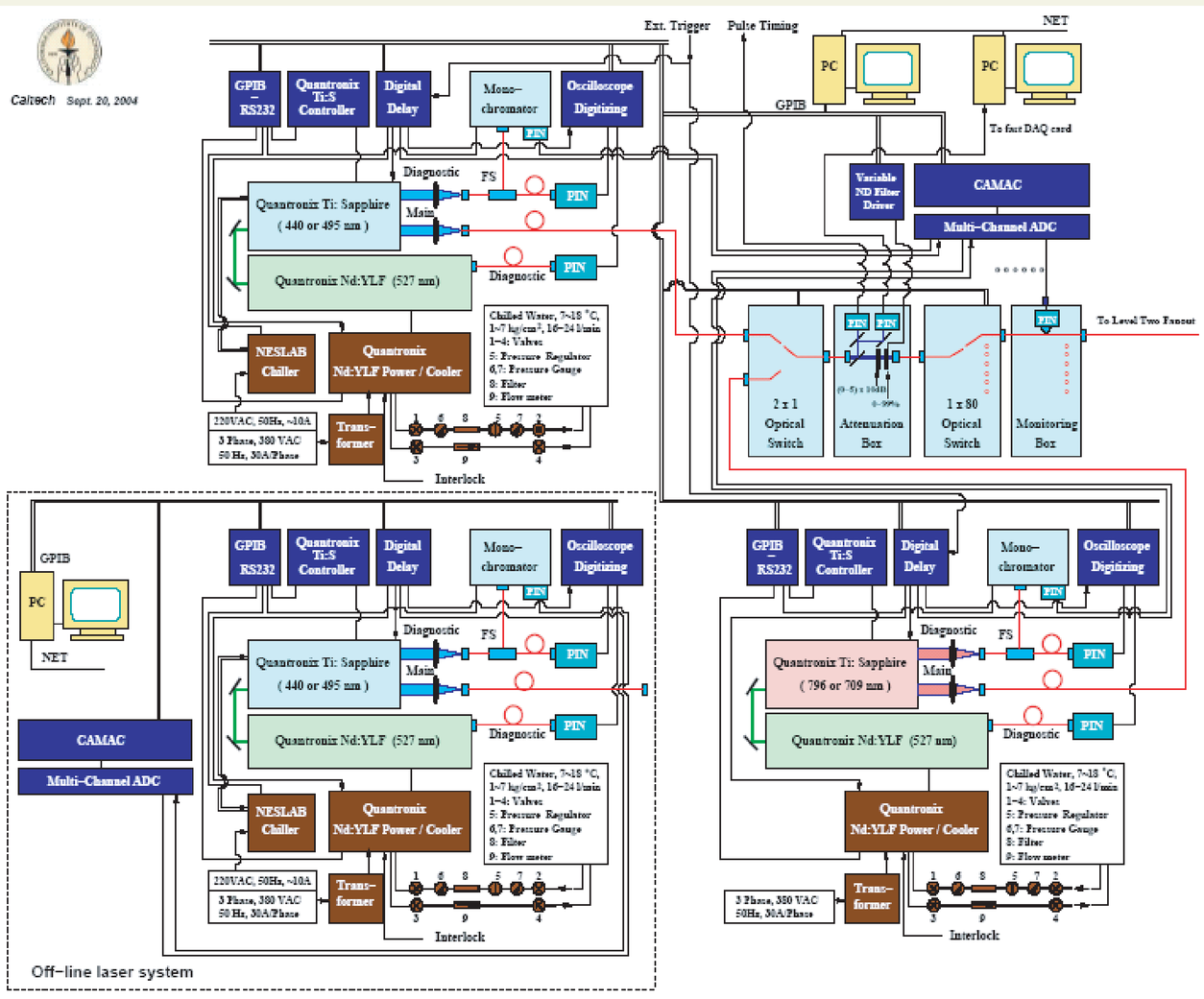

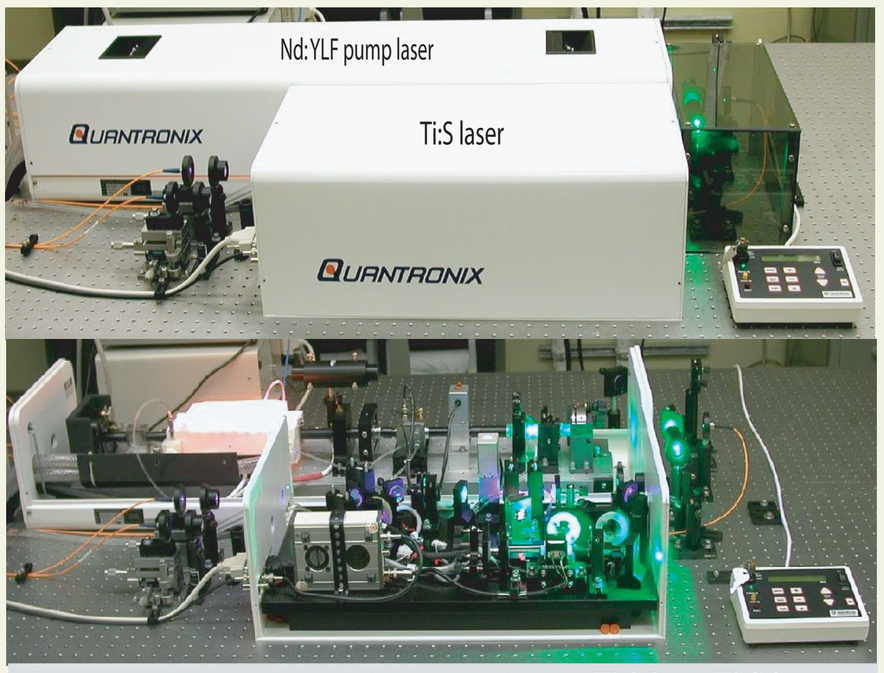

	YLF	Ti:S 1	Ti:S 1	Ti:S 2	Ti:S 2
Wavelength	527nm	440nm	495nm	800nm	700nm
Pulse energy	10mJ	1mJ	~1mJ	1.5mJ	0.42mJ
Pulse width	40ns	25ns	30-40ns	25-30ns	~30ns
Pulse power	250kW	25kW		25kW	

When the H4 DAQ is satisfied with the laser setting, it sends a NIM trigger signal to the laser and the later acknowledges by sending a NIM timing signal to the H4DAQ, indicating a laser pulse of define wavelength is sent to the designated switch channel. The delay between the DAQ trigger and the laser pulse is about 5 us. This light source can accommodate trigger rate up to 100Hz. Additional information concerning laser performance is also available for the H4 DAQ. They are YLF and Ti:S pulse shape spectra, average and r.m.s. of the energy, full width at half maximum, and center timing of the monitoring laser pulse.

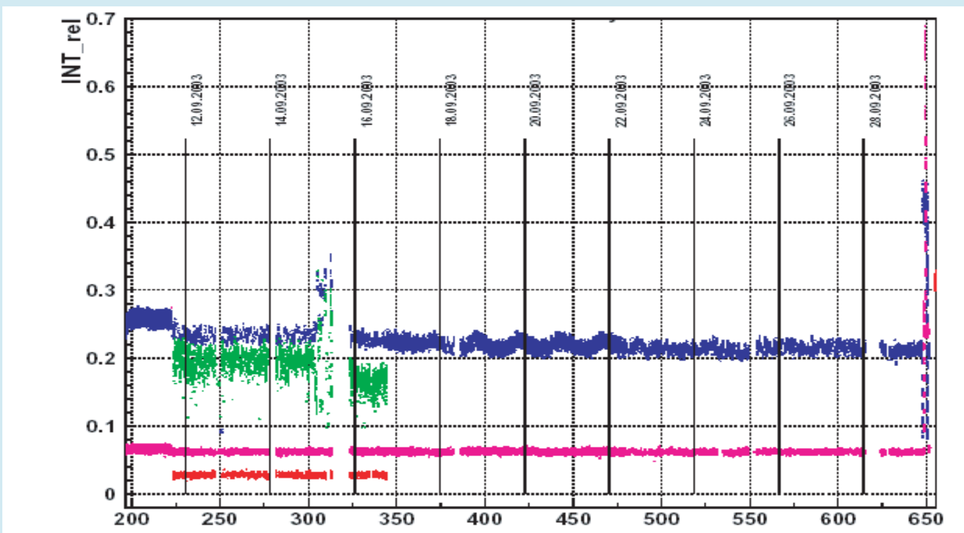

Laser pulse intensity is shown as function of time (h) during a 19 days period in test beam 2003 at CERN, where blue, green, pink and red represent laser pulse energies at 440, 495, 709 and 796 nm respectively. Vertical spreads in the middle left (320h) and right (650h) are laser pulse energy scan runs for electronics test.

Specifications for the monitoring light source:

- 2 wavelengths; one close to the emission peak which provides the best monitoring linearity for the PWO crystals, and the other provides a cross check
- Spectral contamination: □ < 10^{-3}
- Pulse width (FWHM): □ < 40ns to match the ECAL readout
- Pulse jitter: □ □ □ < 3ns for trigger synchronisation to the LHC beam
- Pulse rate : □ □ □ ~80 Hz, which is the maximum rate allowed by the ECAL DAQ
- Pulse Intensity instability: < 10%
- Pulse energy: □ □ □ 1 mJ/pulse at monitoring wavelength, corresponding to □ □ □ □ □ □ 1.3 TeV in dynamic range

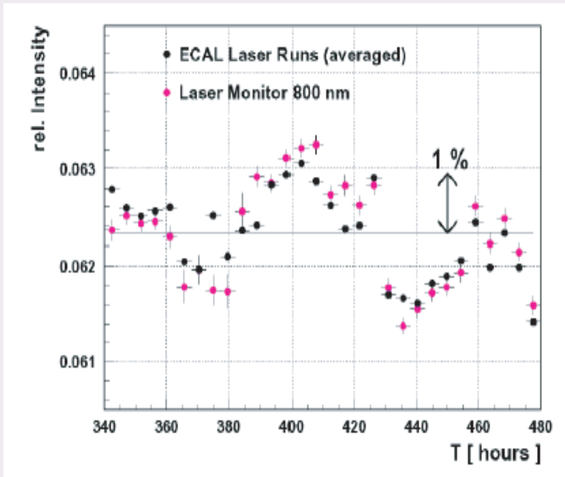

A comparison of laser pulse intensities measured in 6 days in 2003 by ECAL readout (black) and laser monitor (red), without any reference and corrections.A stability at 1% level is achieved in this period with some variations indicating temperature effect since both laser pulse intensity and width are known to be temperature dependent.

Following this observation, a rigourous environmental control is planned to be implemented in USC55 by using portable clean room facilities.

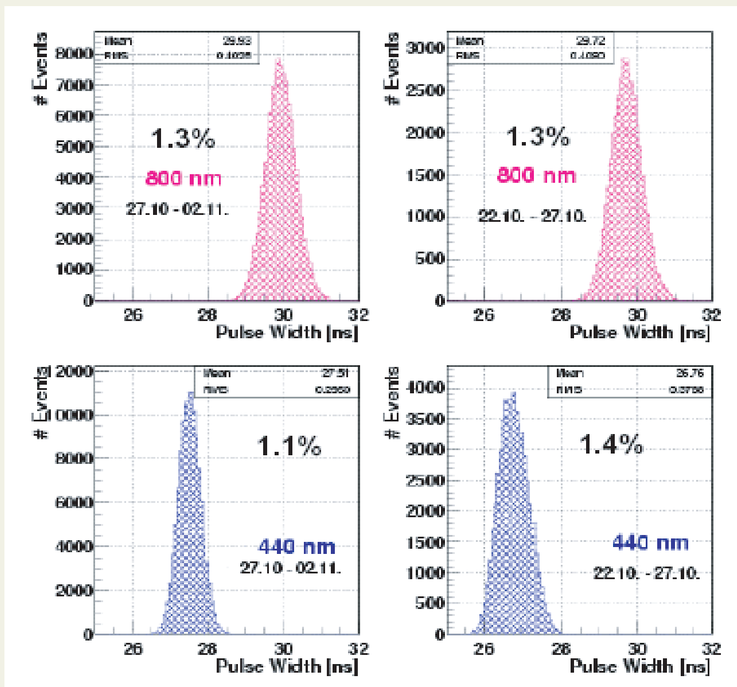

Stability for the 2 main wavelengths over 5 days, 440 and 800 nm, used during test beam 2004.

David Bailleux, Adolf Bornheim, Liyuan Zhang, Kejun Zhu and Dr.Ren-yuan Zhu □ □ □ □ □ □ *January 2005*

□ □ *California Institute of Technology, Pasadena, CA 91125, USA*